ECN	REV	DESCRIPTION	DATE	BY
8111	A	RELEASED	1/31/07	MJW
8186	B	WAS 2250-009 IS 2400-011 WAS 2250A006 IS 2300-050	3/30/07	MJW
8192	C	ADDED ITEMS 41, 42, 43, 44 AND 45	4/9/07	MJW
8230	D	REMOVED 1377-077, ADDED AS2250-025, WAS 1322-015 IS AS2250-015	5/11/07	MJW
8235	E	WAS 1322A051 IS 2300-035 ADDED 2300-038 AND 2300-039	5/17/07	MJW
8240	F	ADDED 2300-042, WAS 1377-080 IS NS1200-016	5/21/07	MJW
8243	G	WAS AS2250-025 IS 2300-048	5/22/07	MJW
8248	H	REMOVED 151A002, ITEM 26 WAS SHOULDER STOCK IS STOCK ASS'Y	5/25/07	MJW
9378	J	WAS 1300A007 IS 1300-017	2/10/10	KAC
9480	K	ADDED PART NUMBER AS2250-020	4/07/10	RDP
10611	L	CHANGED 2300-035 TO 1322B051 CHANGED 1322A044 TO 1322B044	4/27/12	RDP
11154	M	CHANGED 1322A044 TO 2300A035	5/08/13	RDP

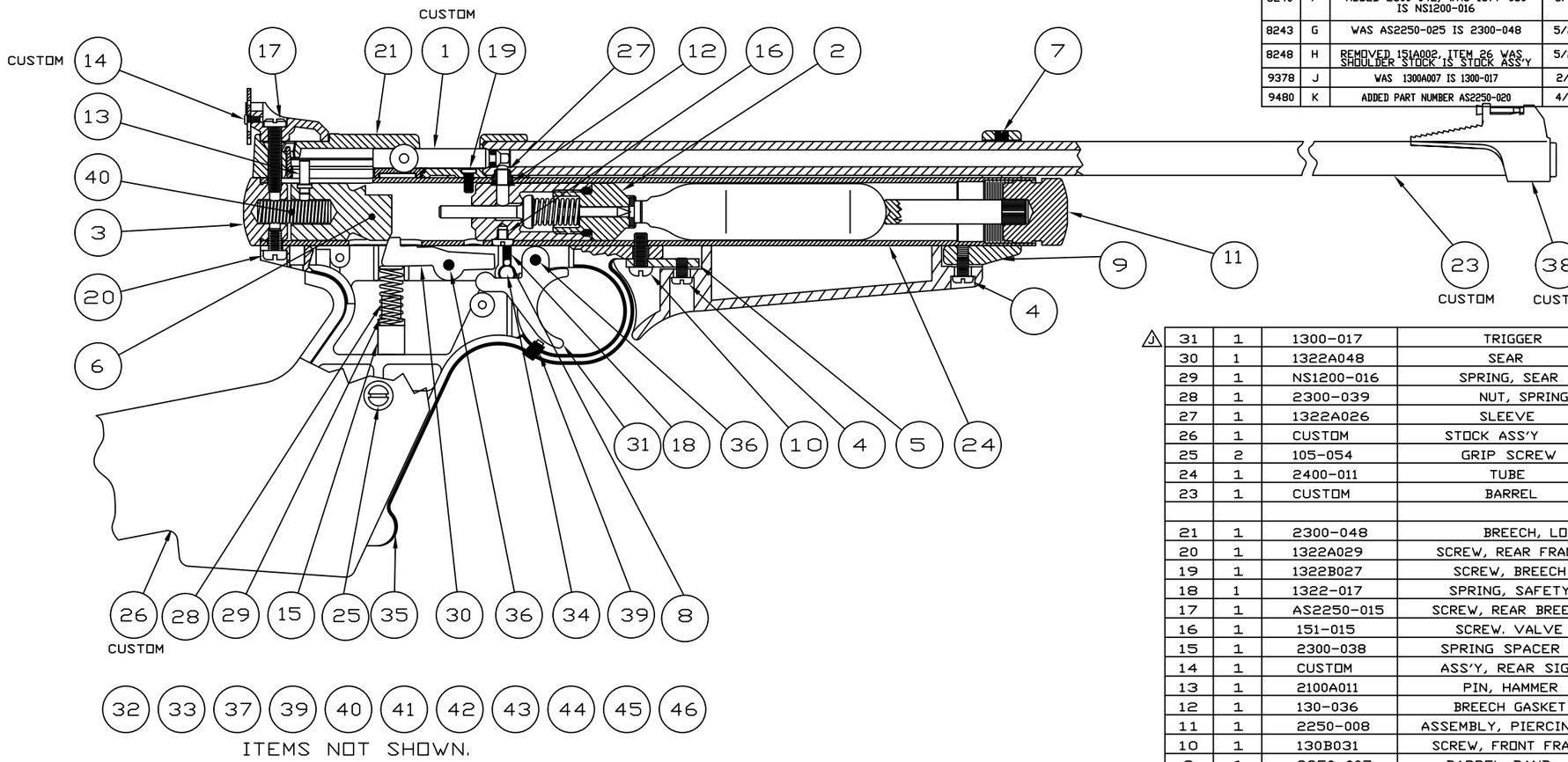

ITEM	QTY	PART NUMBER	PART NAME
31	1	1300-017	TRIGGER
30	1	1322A048	SEAR
29	1	NS1200-016	SPRING, SEAR
28	1	2300-039	NUT, SPRING SPACER
27	1	1322A026	SLEEVE
26	1	CUSTOM	STOCK ASS'Y
25	2	105-054	GRIP SCREW
24	1	2400-011	TUBE
23	1	CUSTOM	BARREL
21	1	2300-048	BREECH, LONG
20	1	1322A029	SCREW, REAR FRAME
19	1	1322B027	SCREW, BREECH
18	1	1322-017	SPRING, SAFETY
17	1	AS2250-015	SCREW, REAR BREECH
16	1	151-015	SCREW. VALVE
15	1	2300-038	SPRING SPACER
14	1	CUSTOM	ASS'Y, REAR SIGHT
13	1	2100A011	PIN, HAMMER
12	1	130-036	BREECH GASKET
11	1	2250-008	ASSEMBLY, PIERCING KNOB
10	1	130B031	SCREW, FRONT FRAME
9	1	2250-007	BARREL BAND
8	1	105-039	BALL, SAFETY
7	1	88-089	SET SCREW
6	1	2300-050	STRIKER
5	1	2250-018	BRACKET, FOREARM
4	2	151-016	SCREW, FOREARM
3	1	2250-004	PLUG, TUBE
2	1	2250-003	ASS'Y, VALVE
1	1	CUSTOM	ASS'Y, BOLT

46	1	AS2250-020	PLUG, BREECH	
45	1	2400KT-525	SHIPPING CARTON	
44	1	2400KT-521	FOAM	
43	1	——	LABEL	
42	1	2400KT-500	ENVELOPE ASS'Y	
41	1	2400KT-520	BOX	
40	1	782-024	SPRING, HAMMER	
39	1	2300-042	SET SCREW, BRASS TIP	
38	1	CUSTOM	SIGHT, FRONT	
37	1	1322B044	COVER	L
36	2	1322-045	PIN, TRIGGER	
35	1	2300A035	FRAME	L M
34	1	1322-052	SAFETY	
33	2	1322-054	SCREW, COVER	
32	1	111A067	WASHER, SPRING	

UNLESS OTHERWISE SPECIFIED
DIMENSIONS ARE IN INCHES
.XX ±.02
.XXX ±.005
ANGULAR ±1°
SURFACE FINISH 63 RMS MAX
TOLERANCES PER ANSI Y14.5M

Crosman Corporation
RTS 5 & 20
E. BLOOMFIELD, NY 14443

DRAWN BY MJW & DATE 1/31/07	CHECKED BY & DATE		PART NAME ASS'Y, GENERAL
APPROVED BY & DATE	SIZE C	SCALE 1:1	DWG. NO. 2400-999 REV M