EXPLODED VIEW
& PARTS LIST

BULLDOG .357
PCP Hunting Rifle
Model: BPBD3S

Manufacture Start Dates: 2/20/15 Last Update 3/5/15

CROSMAN CORPORATION
7629 ROUTES 5 & 20
BLOOMFIELD, NY 14469
Phone: 1-800-724-7486
Parts Order Fax: 585-657-5405
www.crosman.com

- This EVP and parts list is intended to be an informational guide in ordering parts. It is not instructional material and we therefore assume no responsibility for those who use the same without proper factory training.
- Please order by part number and description.
- Check or money order for the total price must accompany the order.
- For current prices contact Crosman Corporation at 1-800-724-7486 or visit our website www.crosman.com

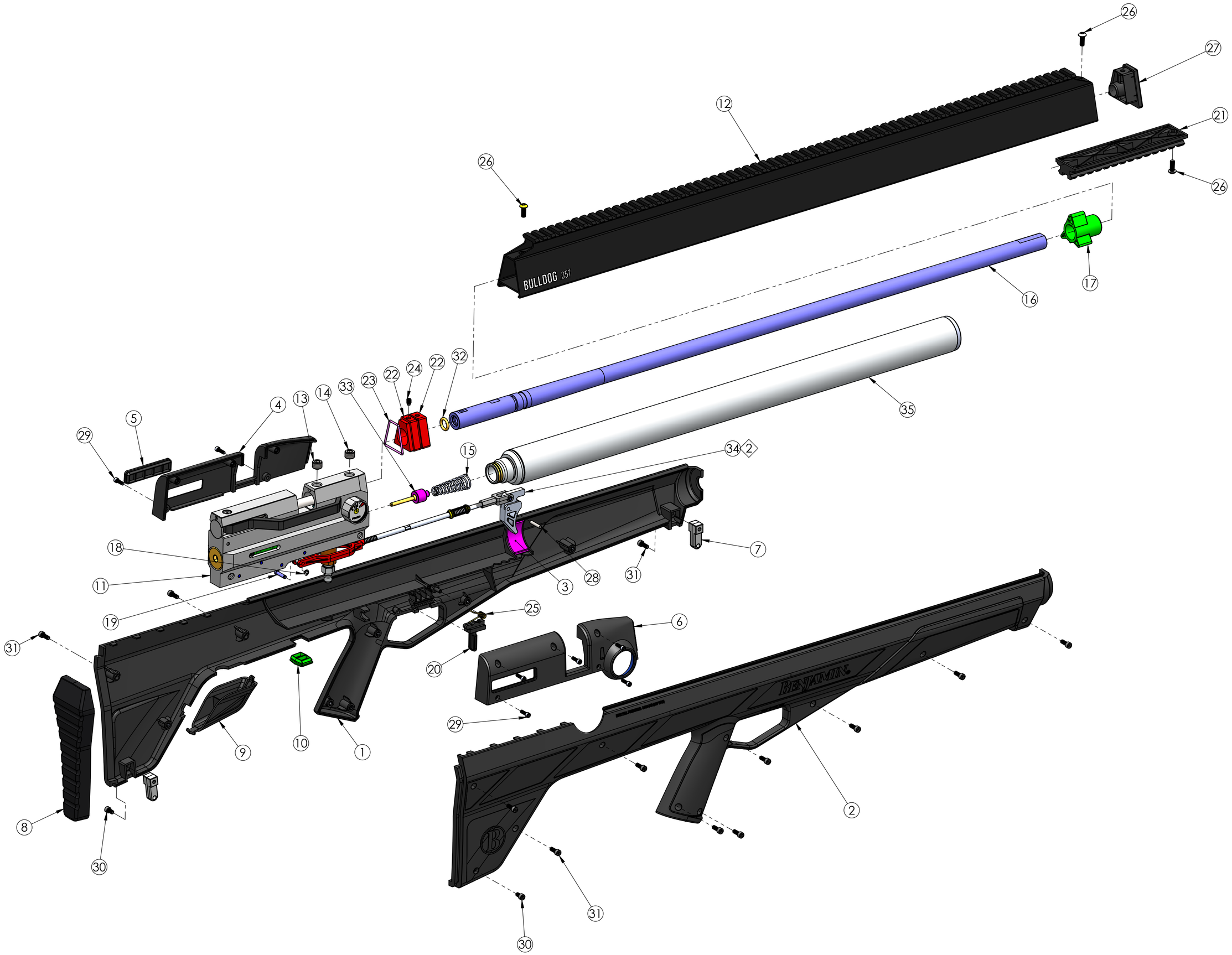

BENJAMIN BULLDOG .357, MODEL BPBD3S

MAIN ASSEMBLY PARTS LIST			
ITEM NO.	PART NUMBER	DESCRIPTION	QTY.
1	R3571-070	STOCK FRAME, LEFT	1
2	R3571-071	STOCK FRAME, RIGHT	1
3	R3571-079	PAD, PRESSURE TUBE	2
4	*R3571-075	CHEEK PIECE, LEFT	1
5	R3571-076	FILLER, CHEEK PIECE	1
6	*R3571-074	CHEEK PIECE, RIGHT	1
7	R3571-077	SWIVEL STUD	2
8	R3571-072	BUTT PAD	1
9	R3571-073	COVER, FILL NIPPLE	1
10	R3571-078	TRIGGER ADJUSTMENT COVER	1
11	RECEIVER ASSY	ASSY, RECEIVER	1
12	R3571-006	SHROUD, BARREL	1
13	R3571-046	SCREW, BARREL LOCATE	1
14	R3571-045	SET SCREW, BARREL	1
15	R3571-037	SPRING, VALVE	1
16	R3571A003	BARREL, .357	1
17	R3571-009	BARREL SPACER	1
18	R3571-055	RETAINING RING, .125"	2
19	R3571-031	PIN, CLEVIS	1
20	R3571-035	SAFETY LEVER	1
21	R3571-025	TAC RAIL, FRONT	1
22	R3571-007	MOUNT, SHROUD	1
23	2563-061	O-RING, #2-022	1
24	R3571-084	SET SCREW, #8-32 X .250, DOG PT	1
25	R3571-036	SPRING, SEAR	1
26	HB17-039	SCREW, #8-32 x .437, BHCS	3
27	R3571-008	SHROUD CAP	1
28	10804	PIN, DOWEL, .125 x .625	1
29	R3571-080	SCREW, 4-40 x .375, SHCS	7
30	R3571-081	SCREW, 6-32 x .250, SHCS	2
31	R3571-082	SCREW, 6-32 x .375, SHCS	12
32	R3571-047	O-RING, 2.5mm x 8.5mm	1
33	R3571-101	ASSY, VALVE STEM	1
34	TRIGGER ROD ASSY	ASSY, TRIGGER ROD	1
35	RESERVOIR TUBE ASSY	ASSY, RESERVOIR TUBE	1

*Order as set (R3571-074 and R3571-075)

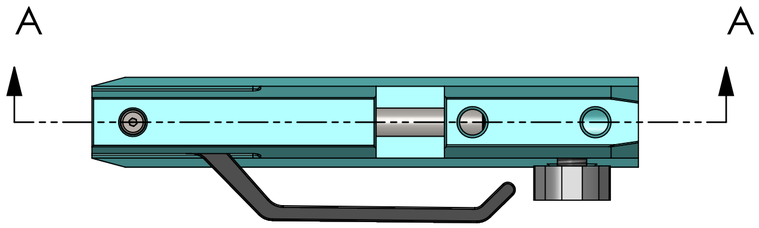

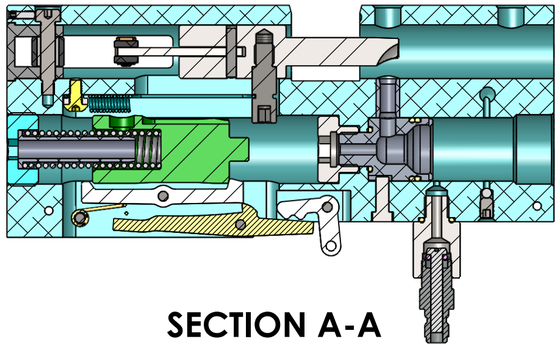

SECTION A-A

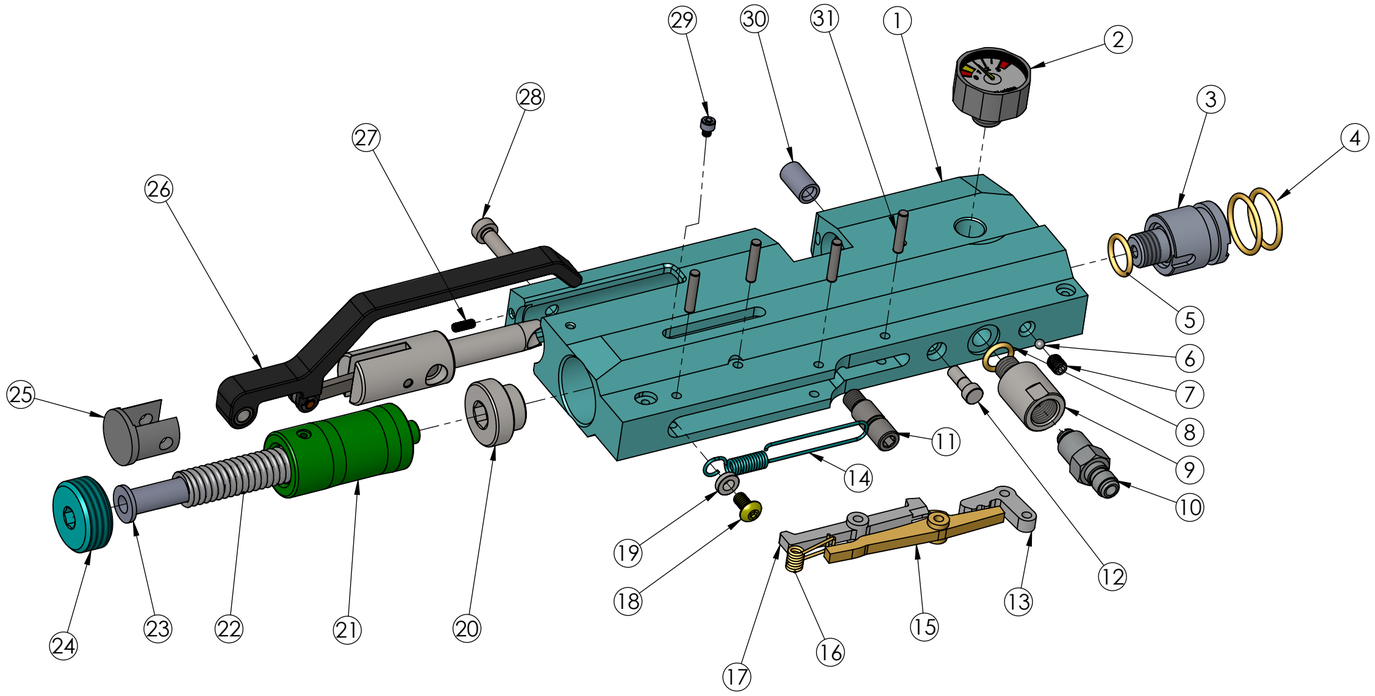

RECEIVER ASSEMBLY BREAKDOWN

RECEIVER ASSEMBLY PARTS LIST

ITEM NO.	PART NUMBER	DESCRIPTION	QTY.
1	R3571-001	RECEIVER	1
2	1763-033	GAUGE, 3000 PSI	1
3	R3571-010	VALVE BODY	1
4	R3571-050	O-RING, #2-017	2
5	R3571-049	O-RING, #2-013	1
6	CH2009-082	.125 DIA SS BALL	1
7	R3571-083	SET SCREW, 10-32 x .250, Flt Pt	1
8	R3571-048	O-RING, #2-011	1
9	R3571-022	FILL NIPPLE ADAPTER	1
10	1761-106	NIPPLE, ADAPTER	1
11	R3571-019	PIN, HAMMER	1
12	R3571-038	PIN, VALVE ORIENTING	1
13	R3571A032	LINK, SEAR	1
14	R3571-040	SPRING, BOLT EXTENSION	1
15	R3571A033	SEAR, LOWER	1
16	R3571-036	SPRING, SEAR	1
17	R3571A034	SEAR, HAMMER	1
18	CH2009-018	SCREW, #8-32 x .312, BHCS	1
19	R3571-041	BUSHING, BOLT SPRING	1
20	R3571-011	NUT, VALVE RETAINING	1
21	R3571-018	HAMMER	1
22	R3571-039	SPRING, HAMMER	1
23	R3571-021	GUIDE, SPRING	1
24	R3571-020	CAP, HAMMER SPRING	1
25	R3571-016	SADDLE, COCKING HANDLE	1
26	BOLT & LEVER ASSY	ASSEMBLY, BOLT & LEVER	1
27	1763-055	SET SCREW, 4-40 x .312, OV PT	1
28	R3571-043	SCREW, SHOULDER, .188 x .750	1
29	R3571-044	SCREW, 4-40x.125, SHCS	1
30	R3571-056	SLEEVE, TRANSFER	1
31	10804	PIN, DOWEL, .125 x .625	4

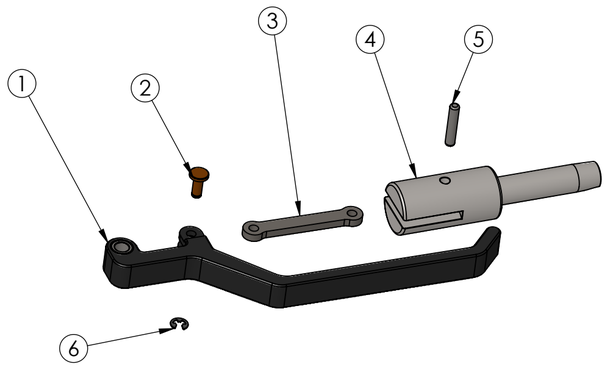

BOLT & LEVER ASSEMBLY BREAKDOWN

BOLT & LEVER ASSY PARTS LIST			
ITEM NO.	PART NUMBER	DESCRIPTION	QTY.
1	R3571-102	COCKING HANDLE ASSY	1
2	R3571-017	PIN, BOLT LINK	1
3	R3571-013	LINK, BOLT	1
4	R3571-012	BOLT, .357 CAL	1
5	10804	PIN, DOWEL, .125 x .625	1
6	R3571-055	RETAINING RING, .125"	1

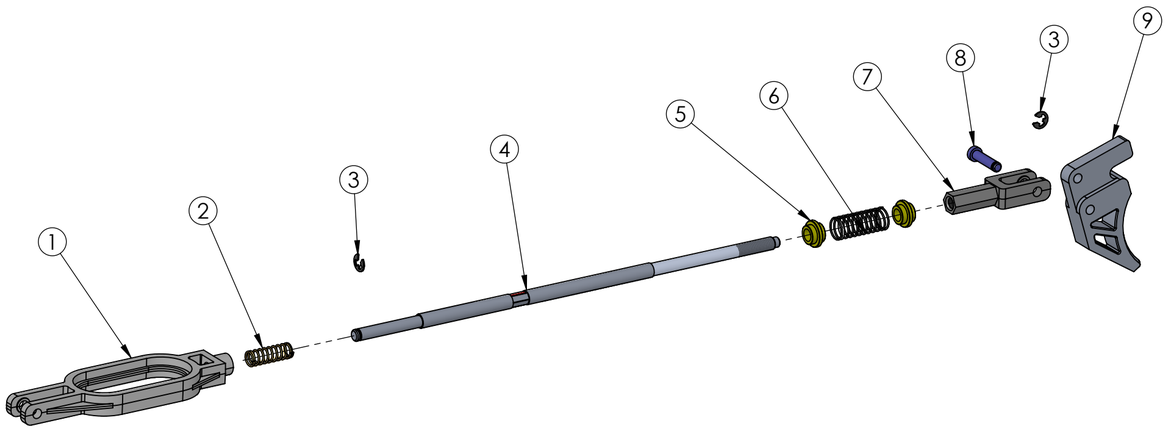

TRIGGER ROD ASSEMBLY BREAKDOWN

TRIGGER ROD ASSY PARTS LIST			
ITEM NO.	PART NUMBER	DESCRIPTION	QTY.
1	R3571-030	CLEVIS, REAR	1
2	C11-541	SPRING,VALVE	1
3	R3571-055	RETAINING RING, .125"	2
4	R3571-027	TRIGGER ROD	1
5	R3571-028	BUSHING, TRIGGER ROD	2
6	R3571-054	SPRING, HAMMER	1
7	R3571-029	CLEVIS, FRONT	1
8	R3571-031	PIN, CLEVIS	1
9	R3571-026	TRIGGER	1

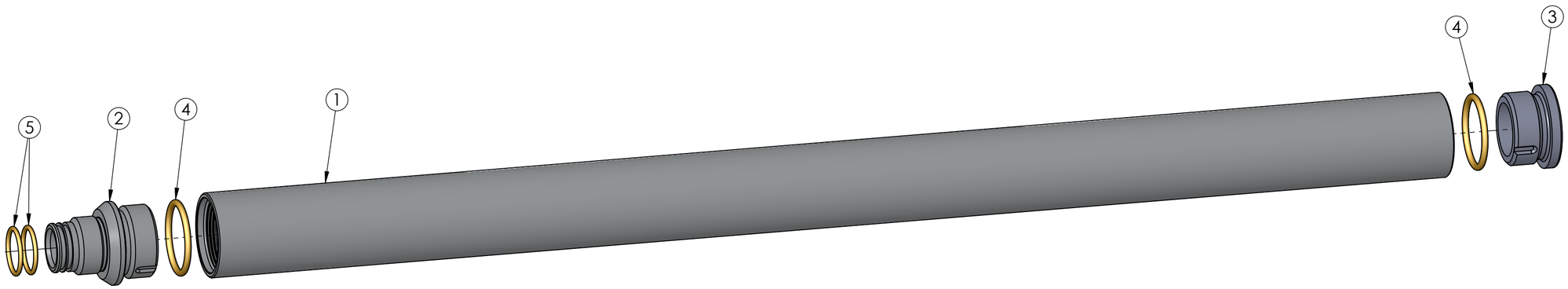

RESERVOIR TUBE ASSEMBLY BREAKDOWN

RESERVOIR TUBE ASSY PARTS LIST			
ITEM NO.	PART NUMBER	DESCRIPTION	QTY.
1	R3571-002	TUBE, RESERVOIR	1
2	R3571-004	ADAPTER, RESERVOIR	1
3	R3571-005	CAP, RESERVOIR TUBE	1
4	R3571-051	O-RING, #2-121	2
5	R3571-050	O-RING, #2-017	2